CNENGR115 Computers and Control

Proportional + Integral Control (and Future Topics)

Dr Zhongming Zhang

School of Engineering
Lancaster University

Control Lectures

Part 1 – Introduction ✓

Part 2 – Mathematical Models ✓

Part 3 – Control Actions

Proportional ✓

Integral ✓

Proportional + Integral

Environmental Control

Proportional Control of Ventilation Rate

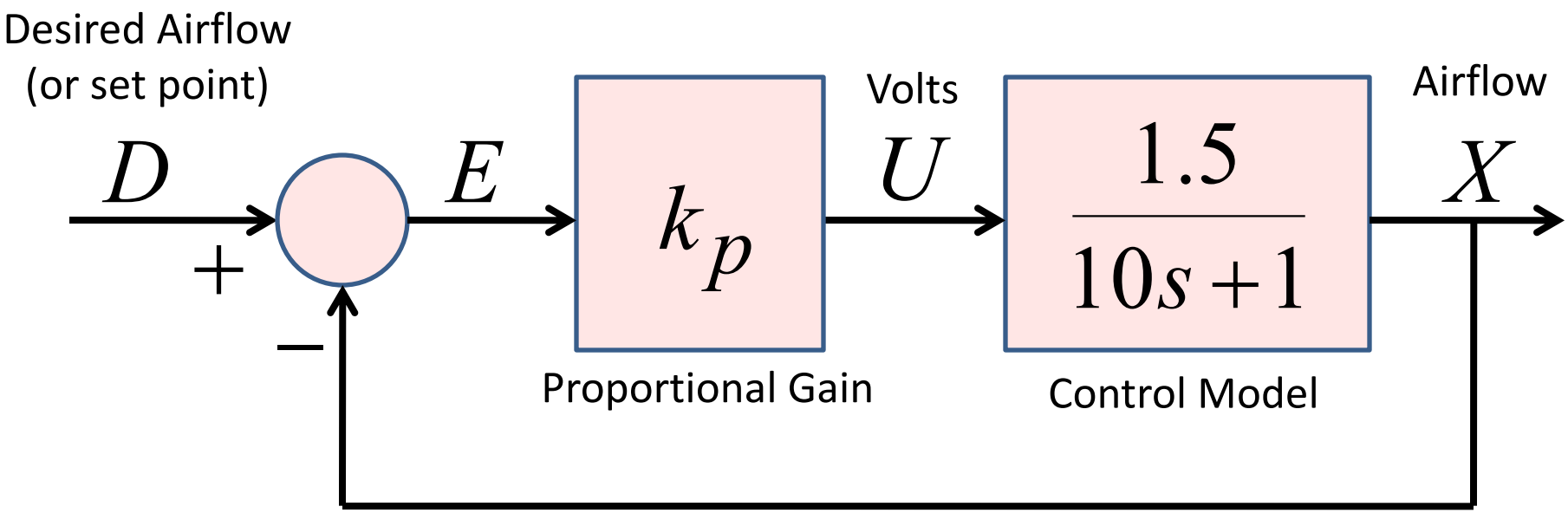

The steady state gain of the closed–loop system is **less than unity**, hence, at steady state, the actual ventilation rate will be less than the desired ventilation rate, i.e. there is a **steady state error**

Proportional Control of Ventilation Rate

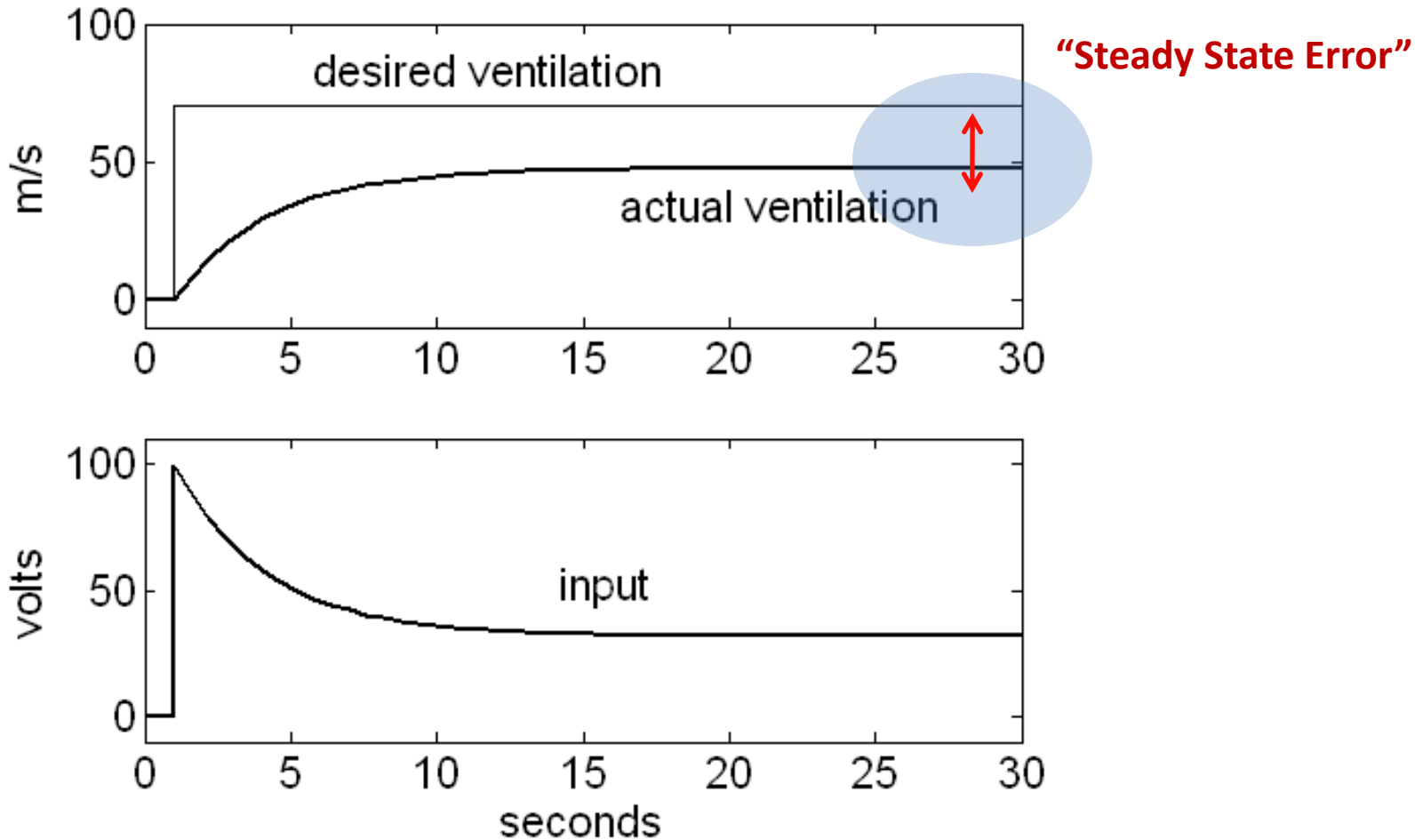

Integral Control of Ventilation Rate

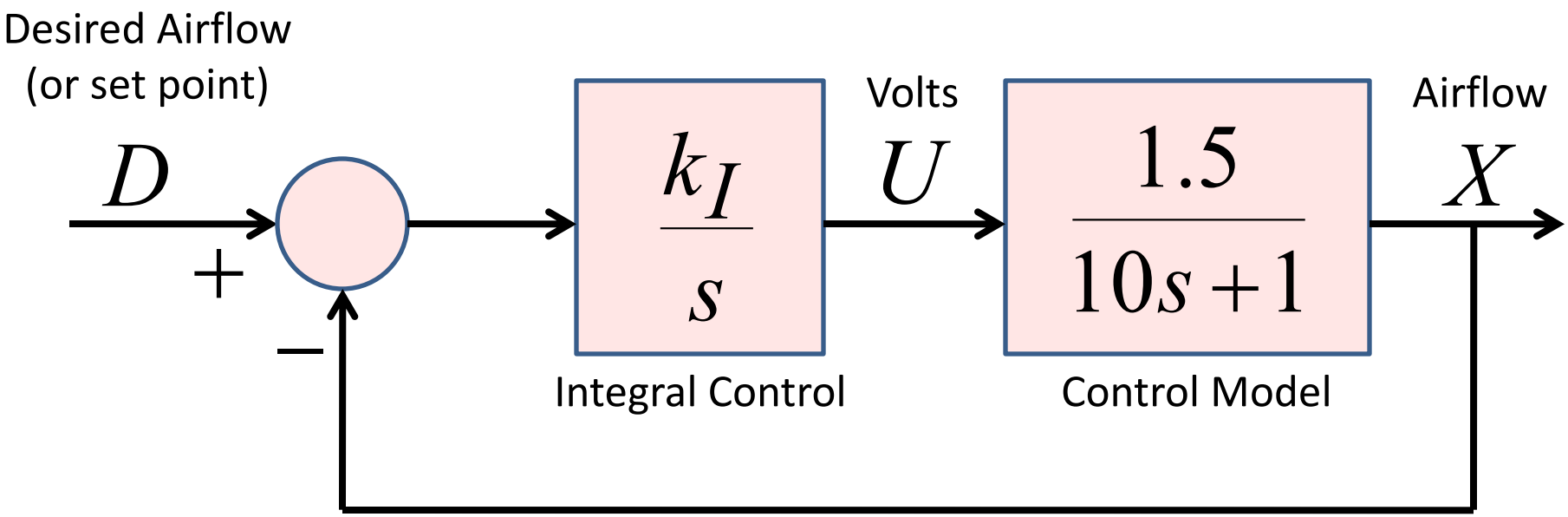

The steady state gain of the closed–loop system is unity, i.e. the **output tracks the set point**, as long as the closed–loop system is stable

Integral Control of Ventilation Rate

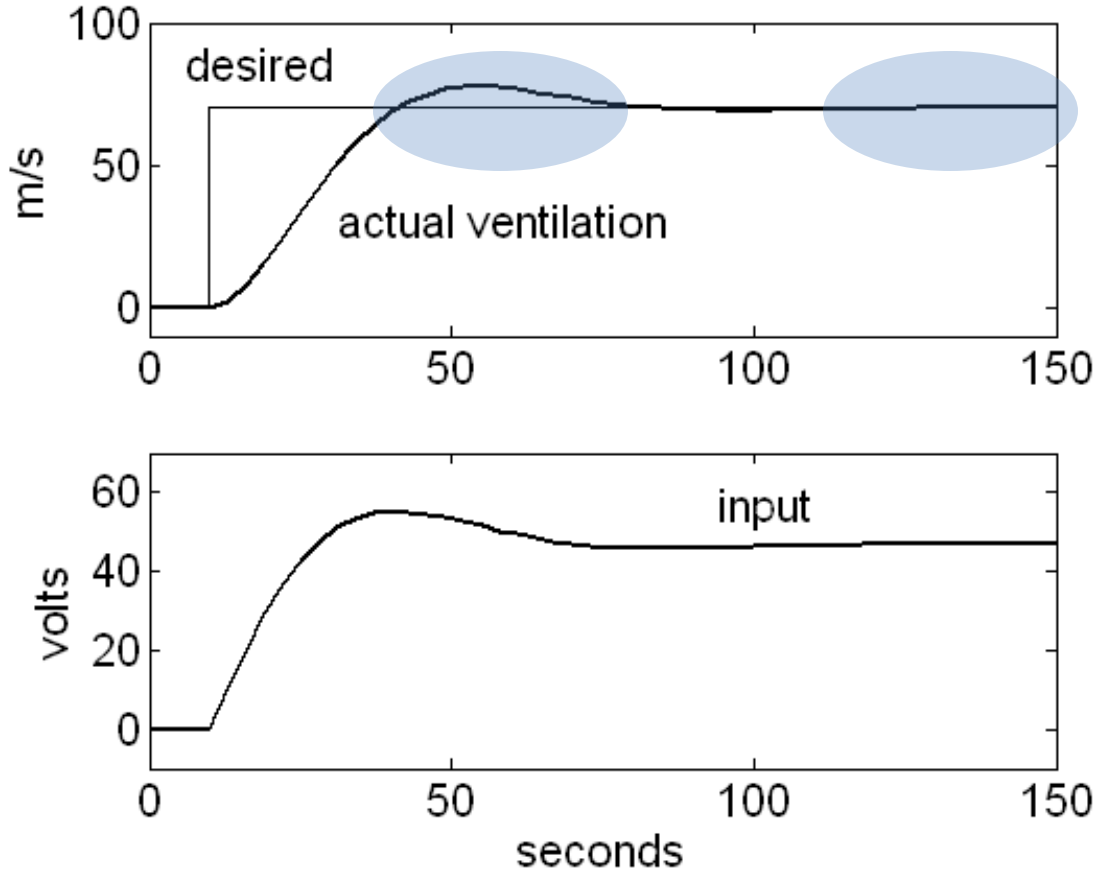

Zero Steady State Error

P+I Control of Ventilation Rate

- Proportional + Integral (PI) control attempts to combine the advantages of the two individual control actions

P+I Control of Ventilation Rate

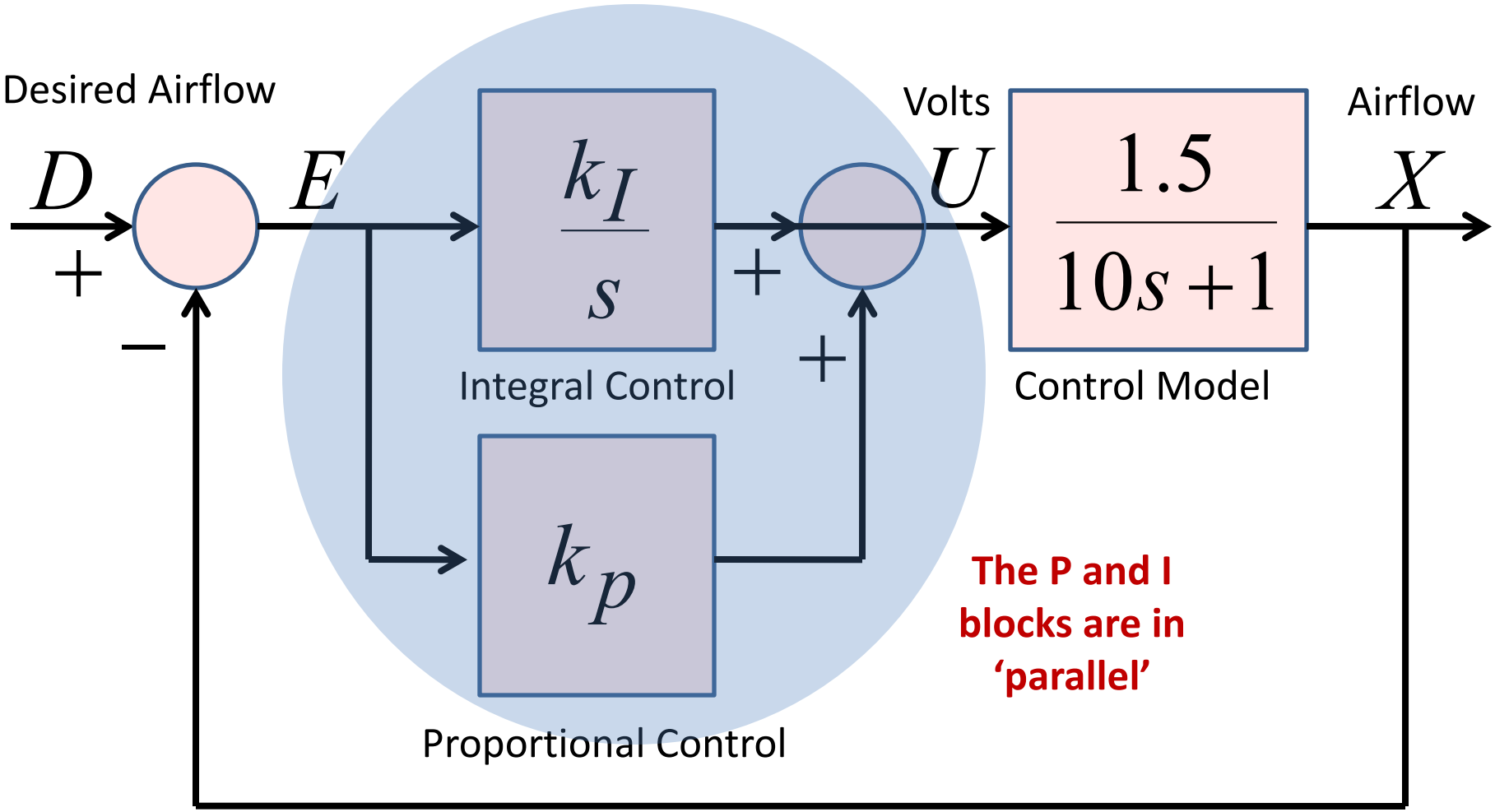

The P and I blocks are in 'parallel'

P+I Control of Ventilation Rate

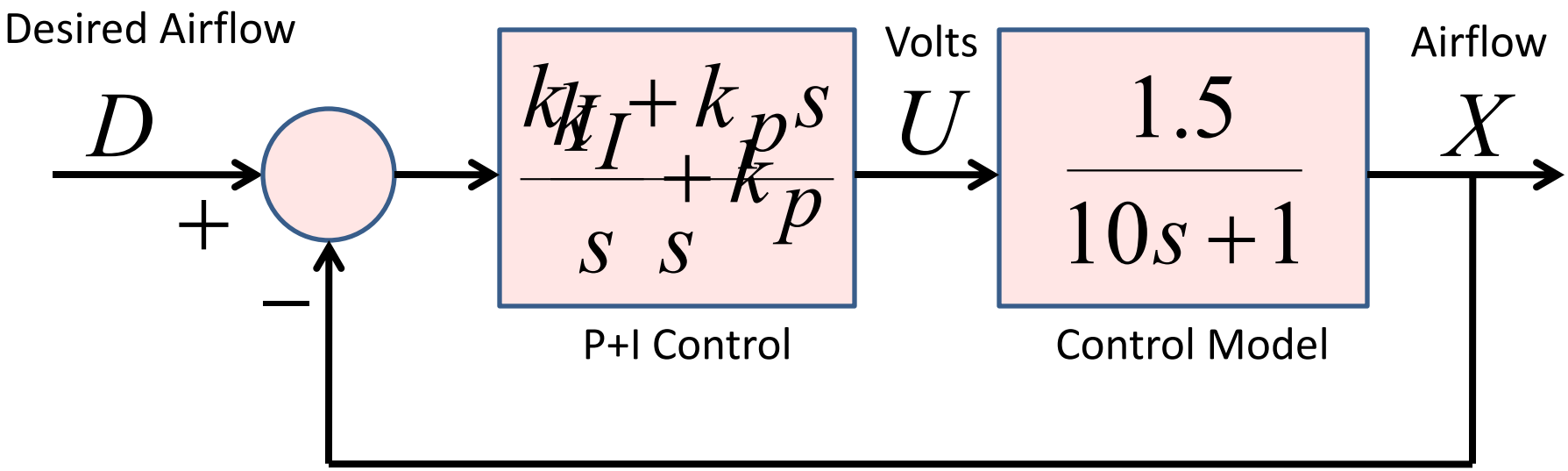

$$\frac{k_I}{s} + k_p = \frac{k_I}{s} + \frac{k_p s}{s} = \frac{k_I + k_p s}{s}$$

P+I Control of Ventilation Rate

- The **control law** is given by

$$U = \left(k_p + \frac{k_I}{s} \right) \cdot (D - X) \qquad \text{or} \qquad U = \left(\frac{k_p s + k_I}{s} \right) \cdot (D - X)$$

- Proportional + Integral (PI) control attempts to combine the advantages of the individual control actions, i.e. **fast** and with **steady state tracking**
- The control engineer chooses suitable values for both control gains

P+I Control of Ventilation Rate

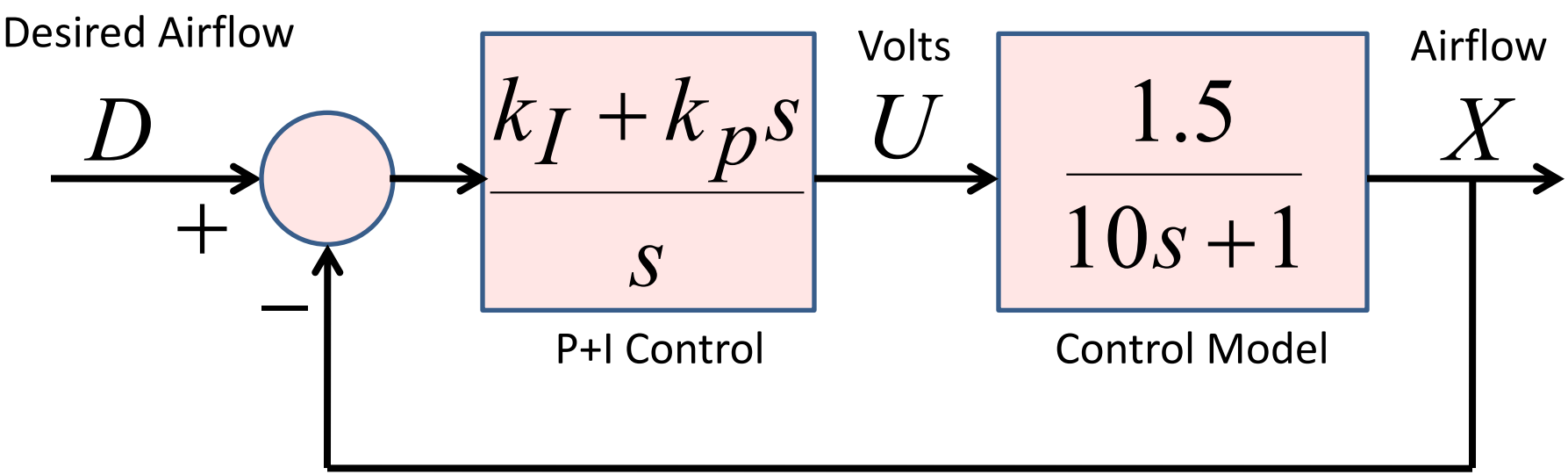

P+I Control of Ventilation Rate

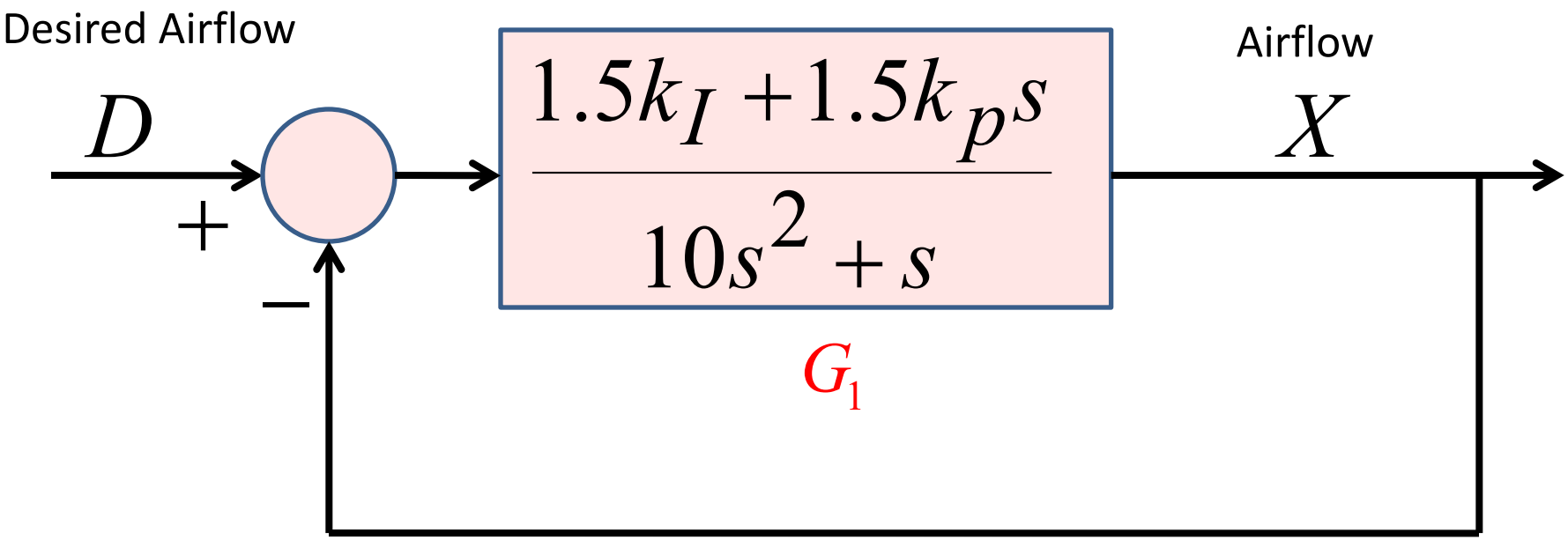

Now use the feedback rule to find the closed–loop transfer function…

$$X = \frac{G_1}{1 + G_1} D$$

P+I Control of Ventilation Rate

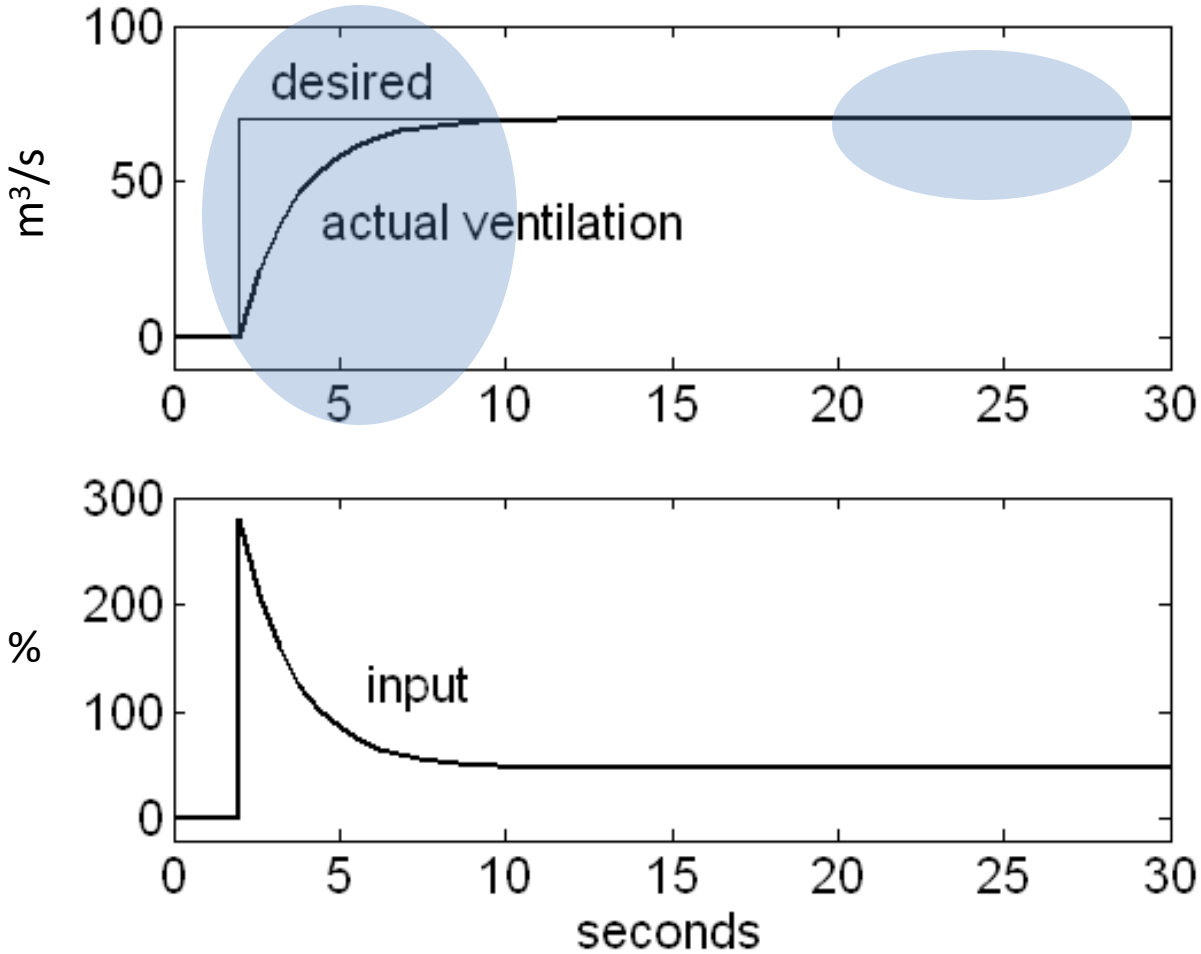

P+I Control of Ventilation Rate

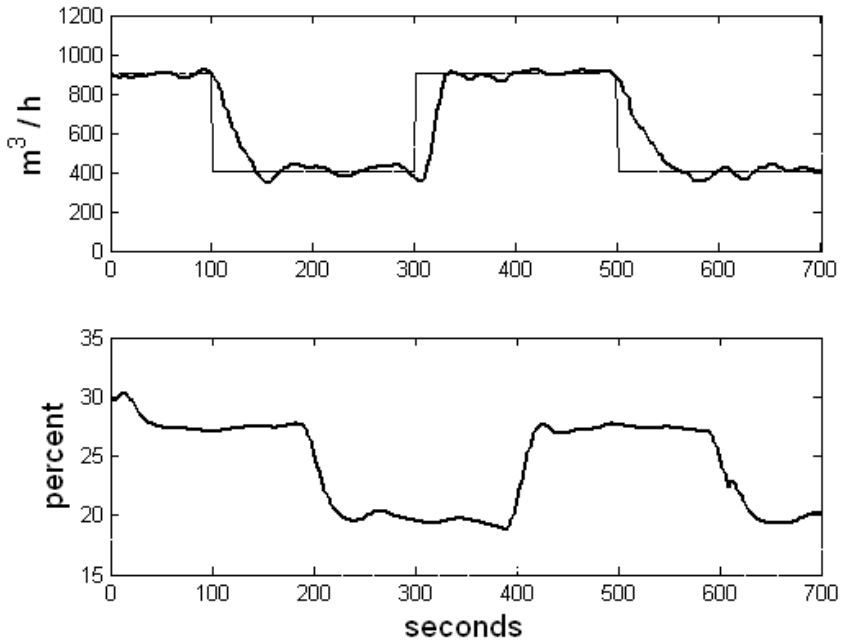

- Results from a Year 3 student research project
- Initial design shown below, improved controller left
- Two control gains for the control designer to 'tune'

k_I, k_p

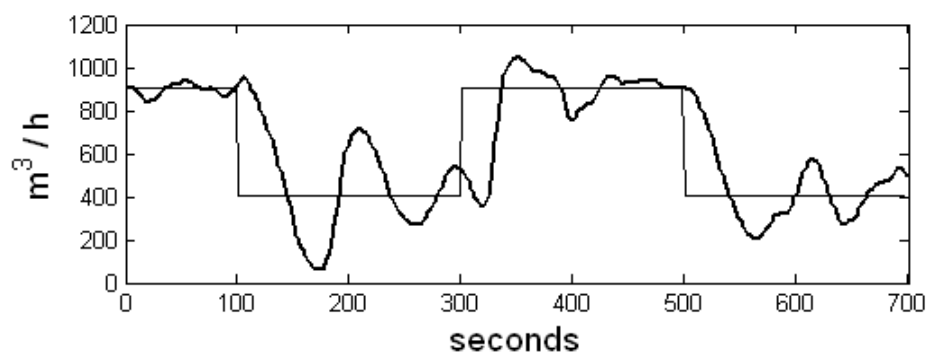

Control of a DC Motor

- A common actuator is a **DC motor** providing direct rotary or translational motion
- For control purposes, we will consider the **input voltage** and **shaft speed output**
- Results on next few slides obtained as part of a third year student project

Proportional Control of a DC Motor

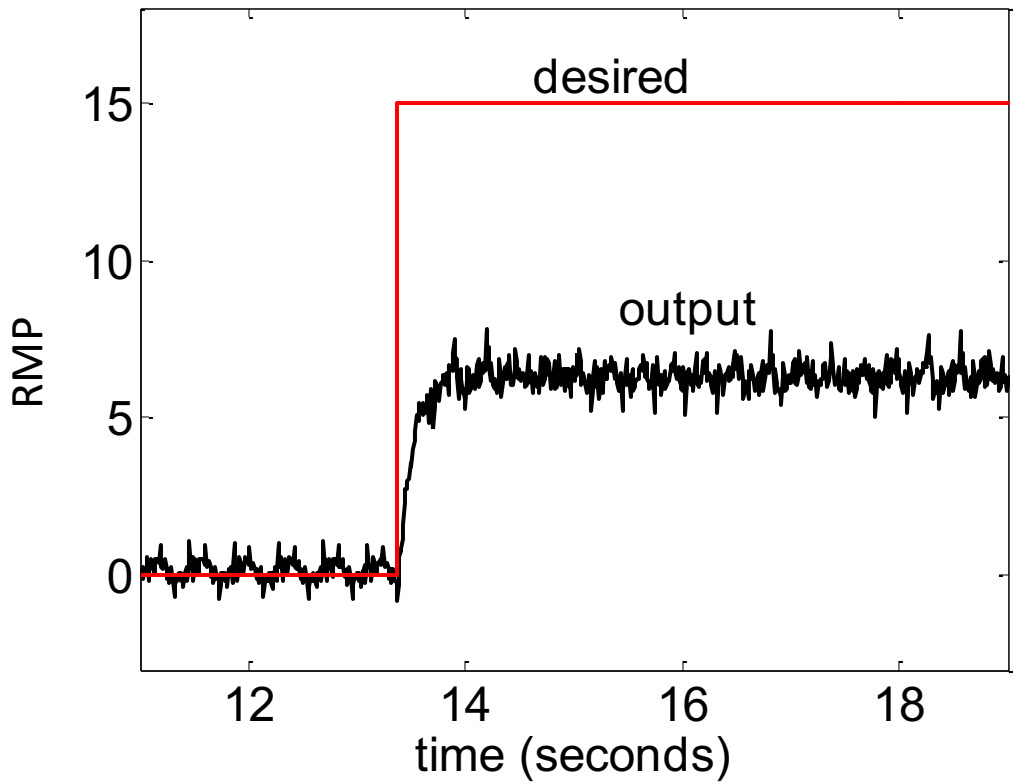

Proportional Control with Command Gain

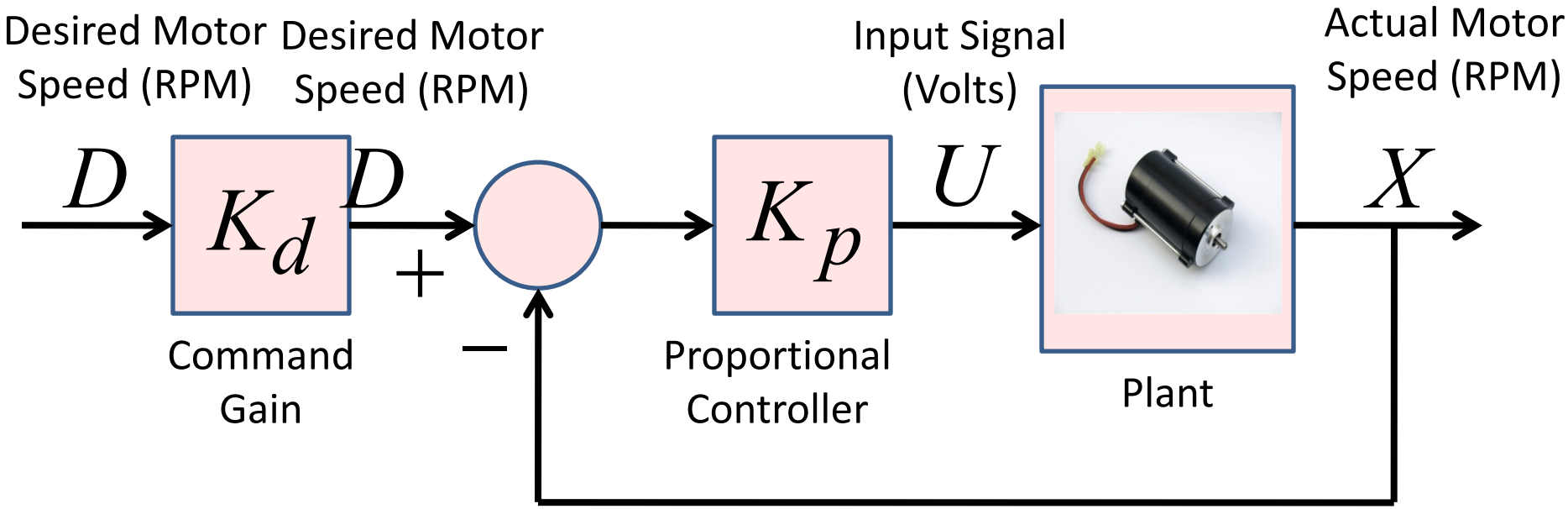

Exercise – if the steady state gain of the plant is denoted G, derive a value (expressed in terms of Kp and G) for Kd that ensures steady state tracking of the desired motor speed

Proportional Control with Command Gain

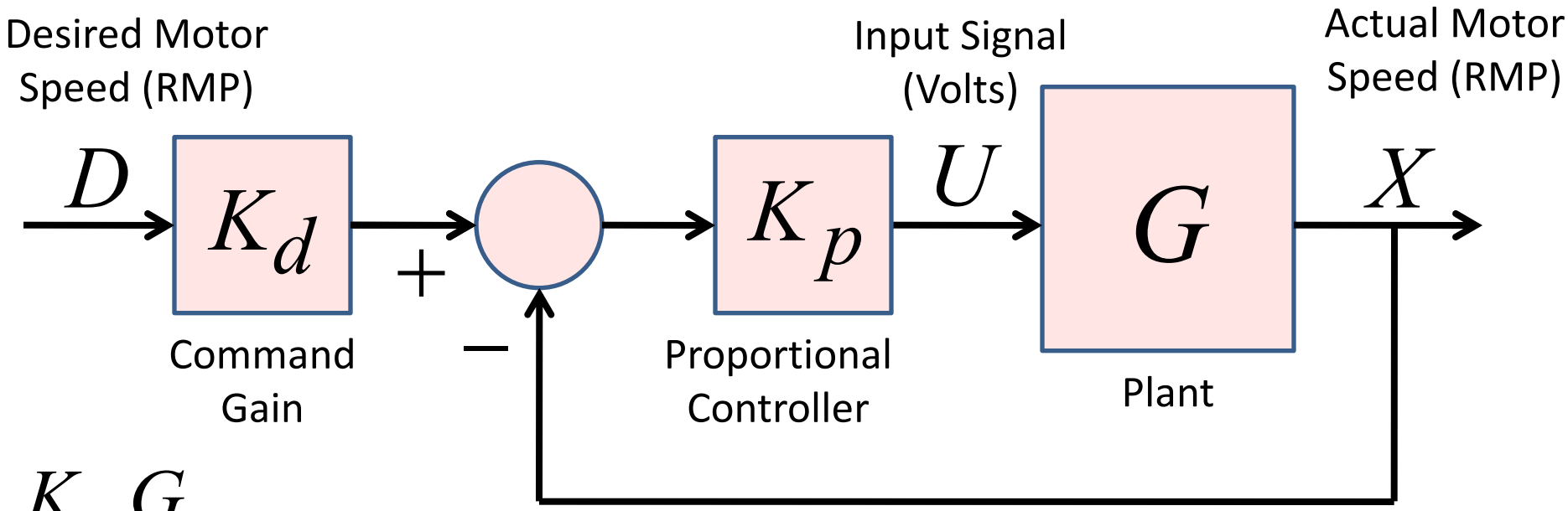

$$K_p G$$

$$\frac{K_p G}{1 + K_p G}$$

$$(K_d)\left(\frac{K_p G}{1 + K_p G}\right)$$

$$K_d = \frac{1 + K_p G}{K_p G}$$

Proportional Control of a DC Motor (with command gain)

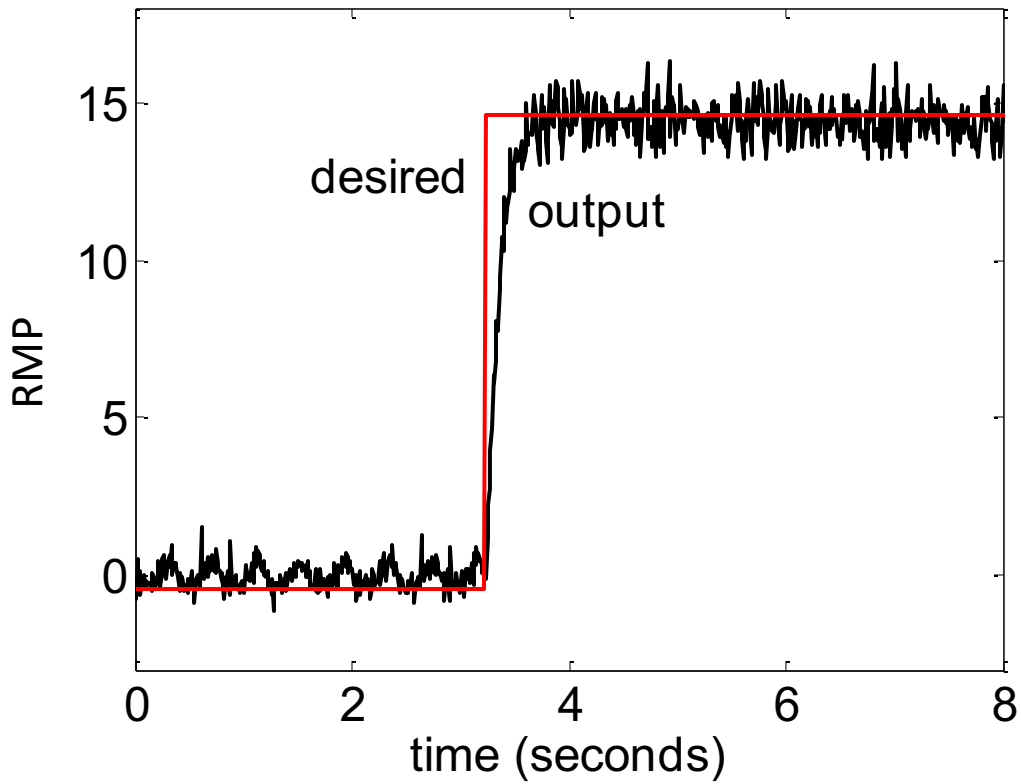

Proportional Control with Command Gain

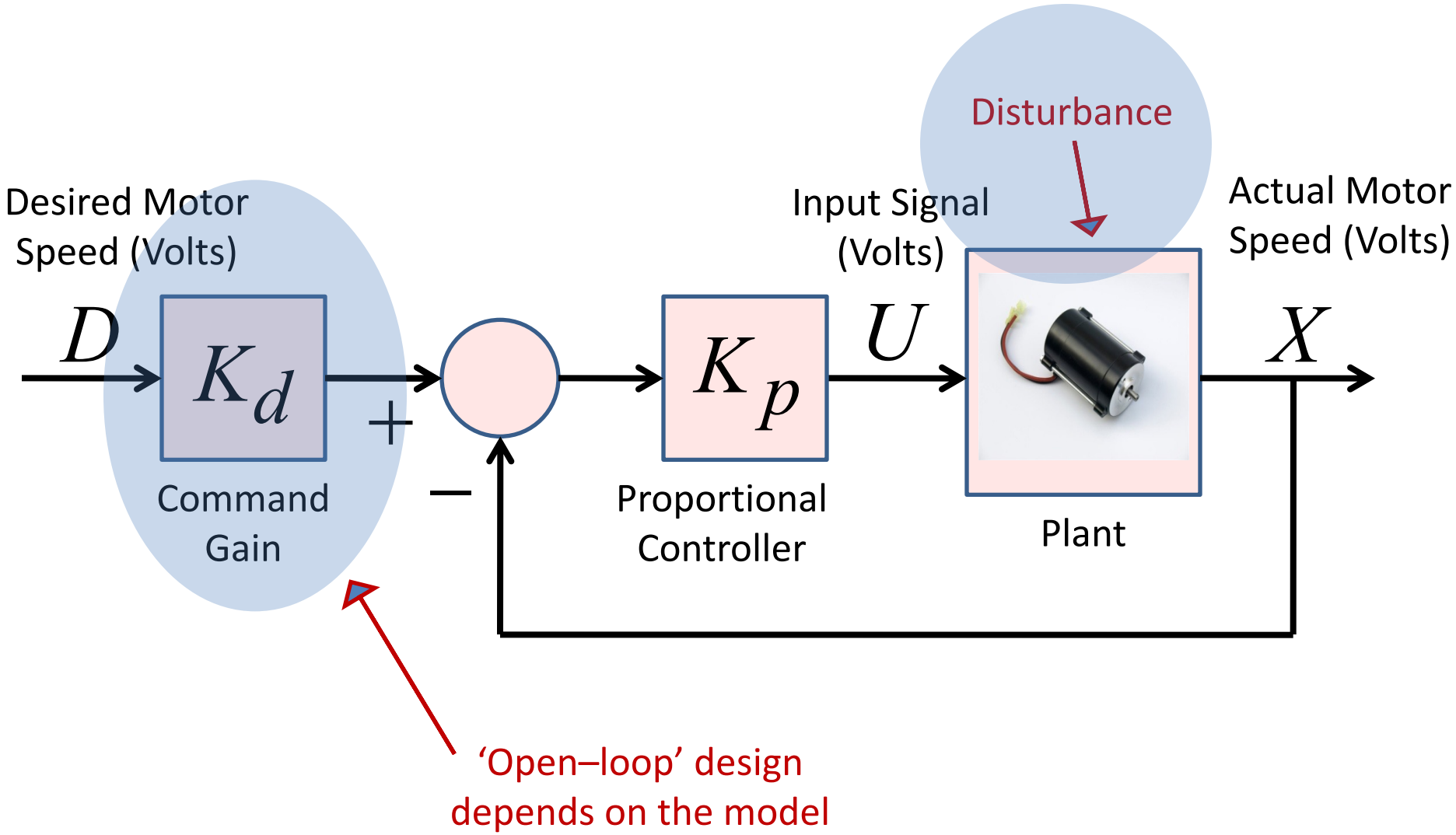

Proportional Control of a DC Motor (with command gain & load disturbance)

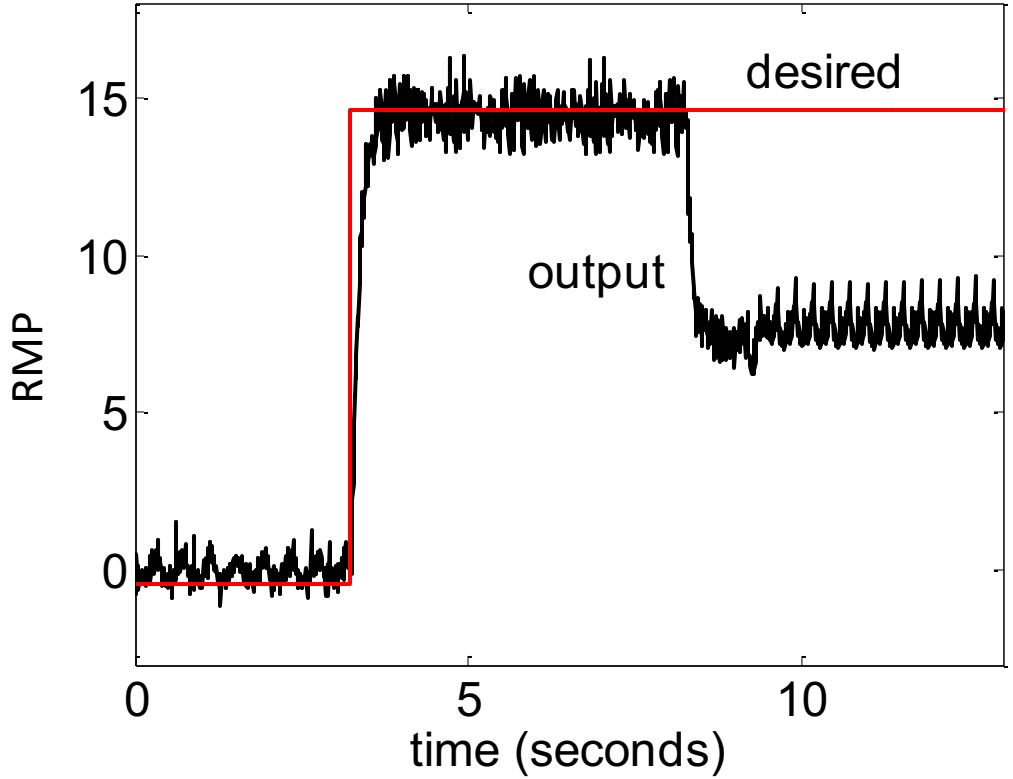

Integral Control of Ventilation Rate

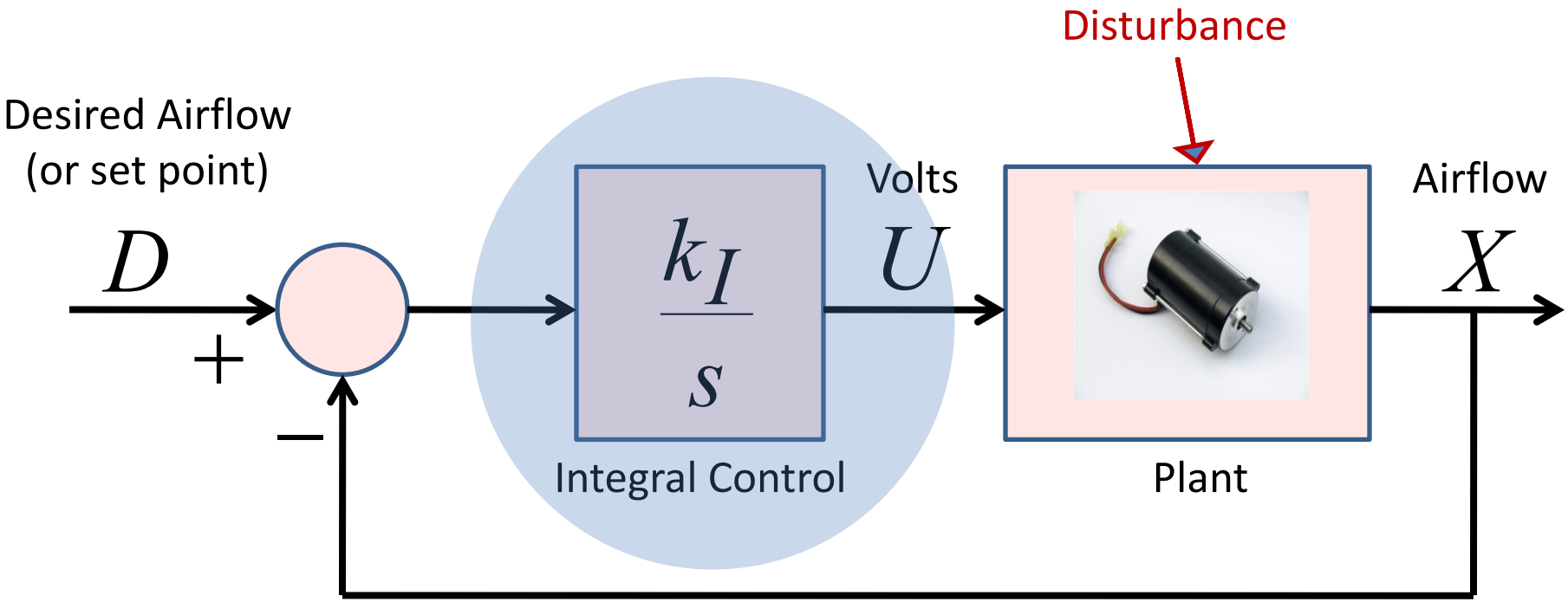

Integral Control of a DC Motor

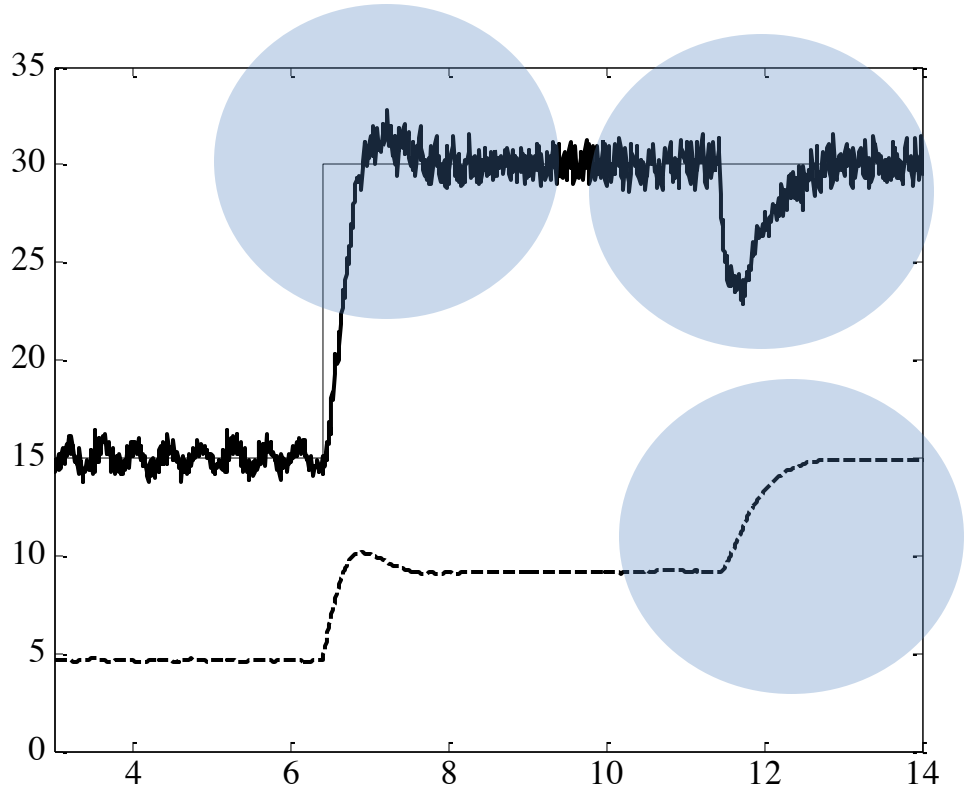

P+I Control of a DC Motor

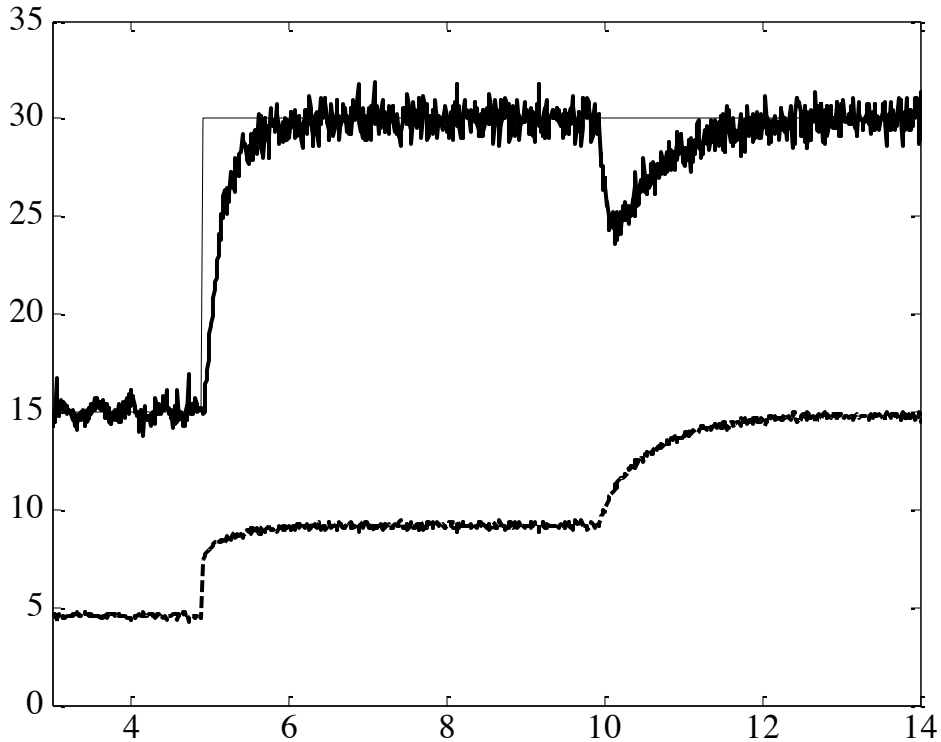

P+I Control of Robot Joint Angle

- Lancaster University Computerised Intelligent Excavator or **LUCIE**
- Developed for the excavation of foundations and general earthworks

P+I Control of Robot Joint Angle

- Comparison of simulation response and real data, showing problematic oscillations
- More advanced control method required!

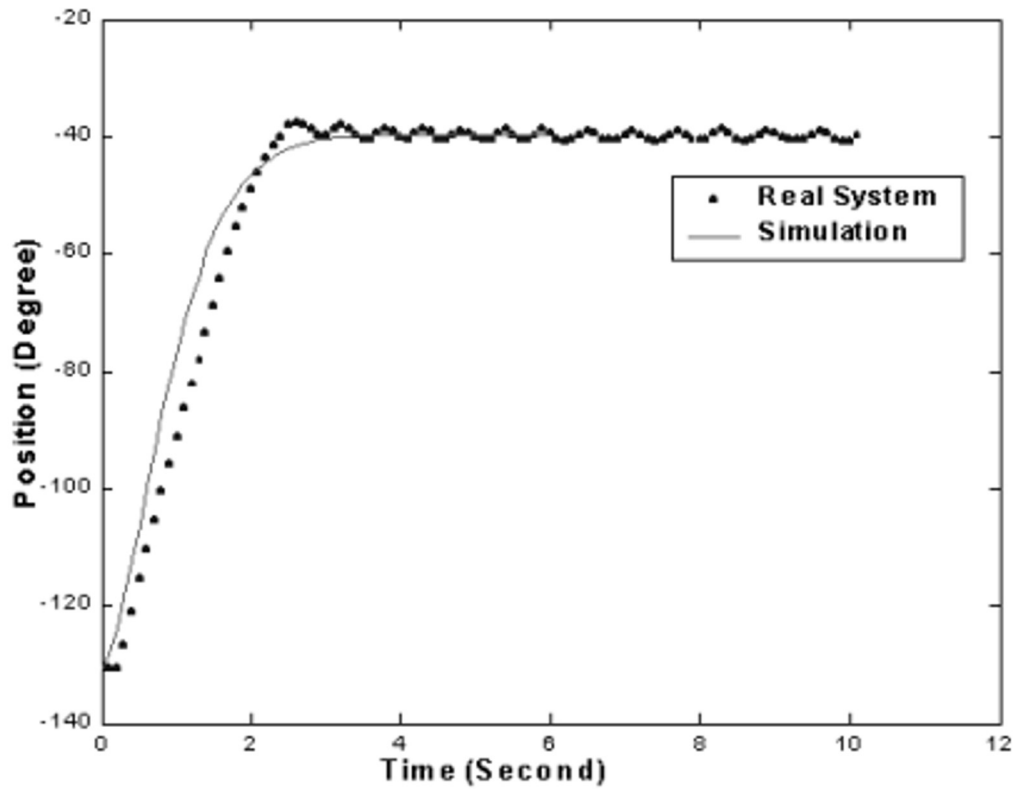

Control System Design

- For a given control problem, we have to choose an appropriate **algorithm** or **control structure**
    - P, I and P+I control
    - PD and PID control (with Derivative action)
    - “Advanced methods” (numerous different paradigms)

Control System Design

- Having chosen the control structure, we still have to tune the **control gains** to meet the design objectives
  - Trial & error directly on the real system
  - Trial & error using **simulation** (Engr202)
  - Frequency domain methods (Engr202)
  - Model–based methods (Engr115 briefly, then Engr202 and MEng)

$$k_I, k_p$$

Adaptive Control

- Control characteristics are adjusted on-line, i.e. adaptive
- Automatically responds to changes in the system, e.g. fuel consumption
- Successfully used in aircraft and spacecraft control applications
- More complex than **fixed gain** control, with potential problems such as parameter drift

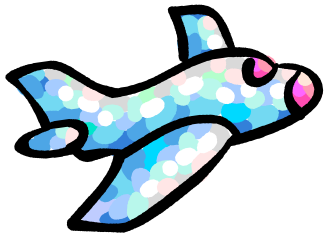

Robust Control

- Design method that focuses on the reliability (robustness) of the controller
- Robustness is defined as the minimum requirement a control system has to satisfy to be useful in a practical situation
- **Typically based on the worst case scenario**
- Such controllers may not be optimal under normal circumstances

Performance **Robustness**

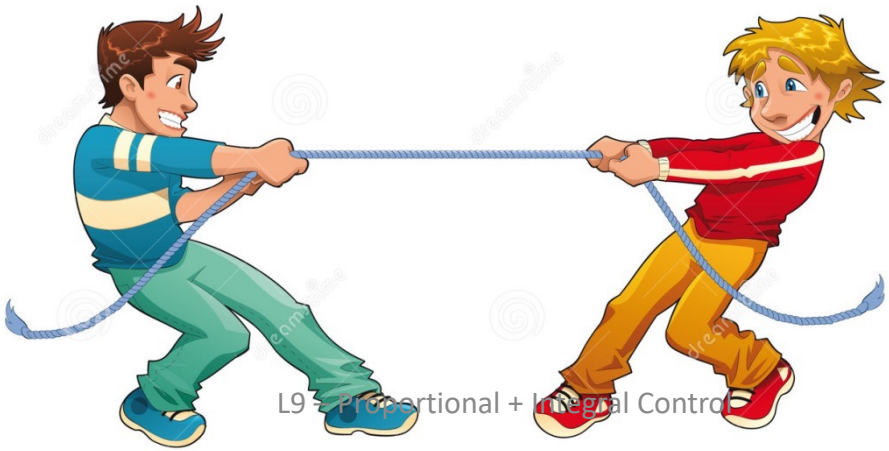

Predictive Control

- Successfully used in many industrial control applications
- Model is used to **predict the future output**
- Controller designed to generate optimal input signals into the future
- Such optimisation is repeated at each sampling instant (**receding horizon**)

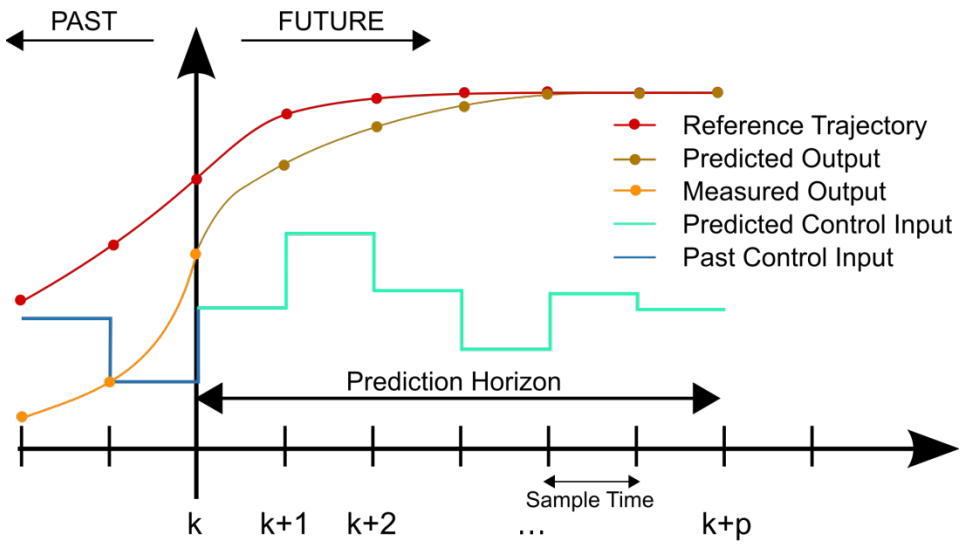

An Example of Model-Based Control

Hydraulic Piling Rig

Control System Design

- Having chosen the control structure, we still have to tune the **control gains** to meet the design objectives
    - Trial & error directly on the real system
    - Trial & error using **simulation**
    - Frequency domain methods
    - Model–based methods

Hydraulic Piling Rig

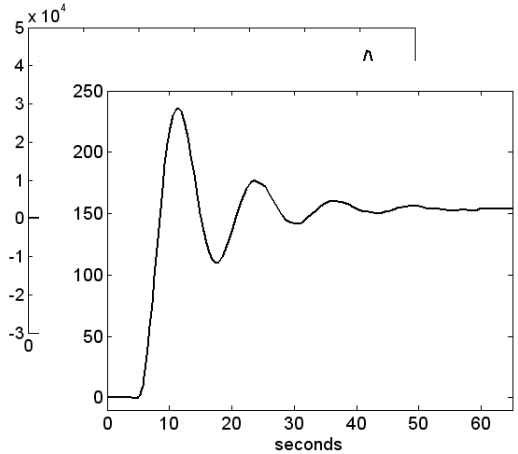

Desired closed–loop differential equation:

$$\frac{d^2x}{dt^2} + p_1\frac{dx}{dt} + p_2 x = p_3 d$$

$$\frac{dx}{dt} + a_1 x = b_0 u$$

$$X = \frac{b_0}{s + a_1} U$$

$$X = \frac{p_3}{s^2 + p_1 s + p_2} D$$

PI control of the Hydraulic Piling Rig

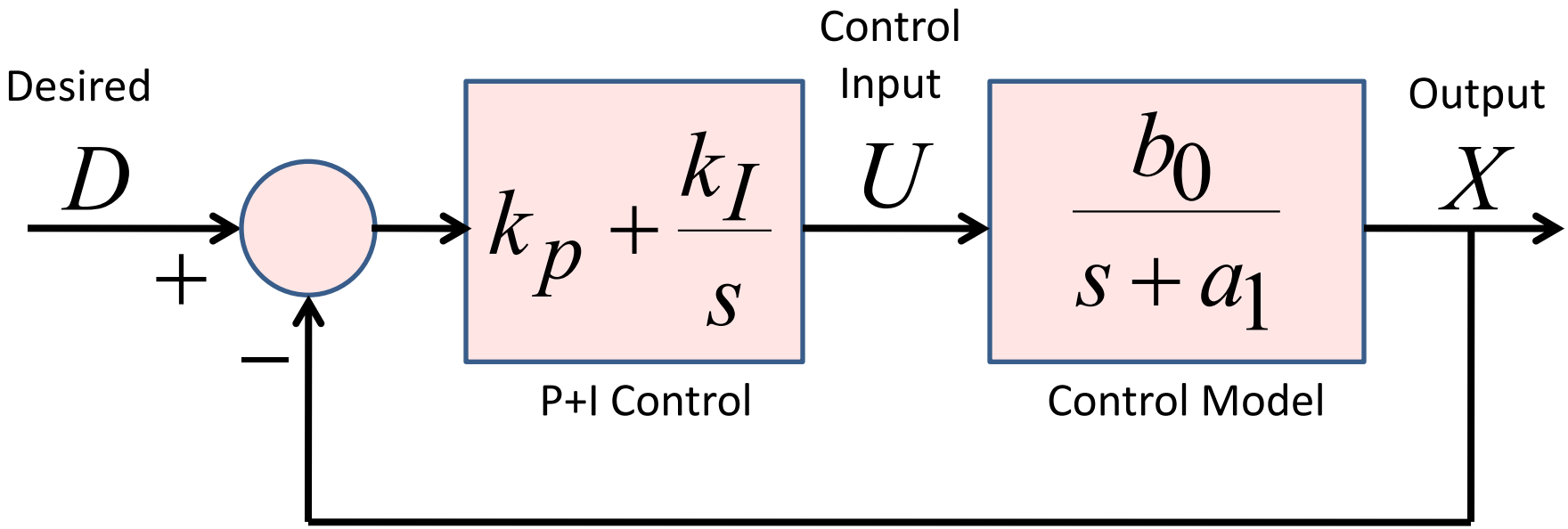

Closed–loop Transfer Function:

$$X = \frac{k_I b_0 + k_p b_0 s}{s^2 + \left(a_1 + k_p b_0\right)s + k_I b_0} D$$

PI control of the Hydraulic Piling Rig

$$X = \frac{k_I b_0 + k_p b_0 s}{s^2 + \left(a_1 + k_p b_0\right)s + k_I b_0} D \qquad X = \frac{p_3}{s^2 + p_1 s + p_2} D$$

$$s^2 + \left(a_1 + k_p b_0\right)s + k_I b_0 \qquad s^2 + p_1 s + p_2$$

$$k_I b_0 = p_2 \quad \rightarrow \quad k_I = \frac{p_2}{b_0}$$

$$a_1 + k_p b_0 = p_1 \quad \rightarrow \quad k_p = \frac{p_1 - a_1}{b_0}$$

PI control of the Hydraulic Piling Rig

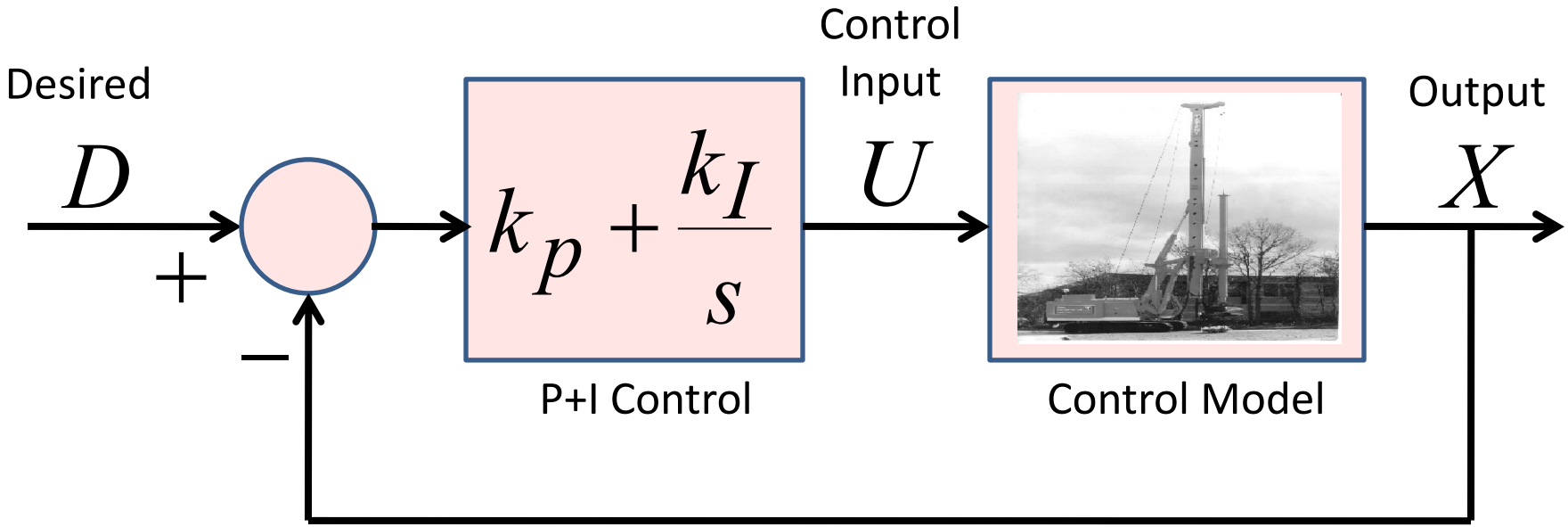

PI control of the Hydraulic Piling Rig

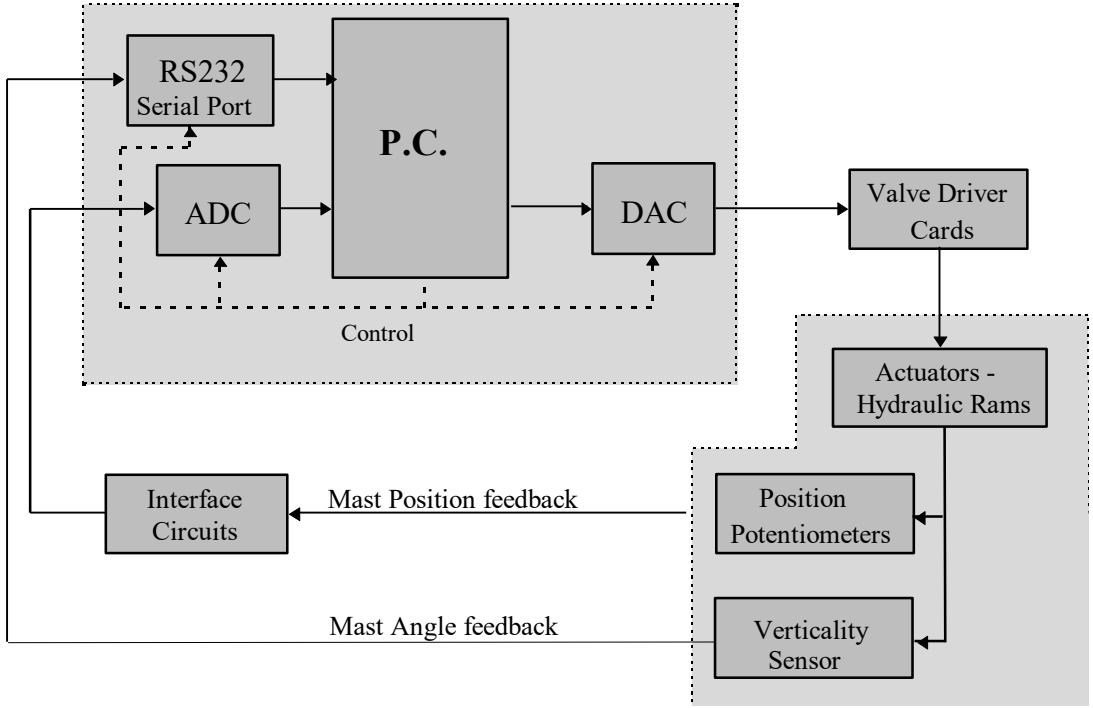

Hardware functional configuration (Roger Dixon)